# Schlegel Weather Seal Range

## Technical Data Sheet
## Product = QLON 9536

### Testing undertaken to ISO 9001/2000; BSI Registration FM15052 (since 29/07/1992)

| Specification | | | |
|---|---|---|---|
| **Characteristic** | **Value** | **Units** | **Test Method** |
| **ACLD** (Aged Compression Load Deflection) | 1.0-5.0 N/100mm | Newtons per 100mm length | In House |
| **Compression Set** | >20% set after 24hours (50% compression) @ 70°C | % Recovery mm | In House |
| **Dimensions** | | mm | In House |

**BS EN 12365:2003 Part 4 Classification W 3 2 5 6 6**
**(Please note – 'recovery after aging' is not applicable to this assessment)**

## Drawing Detail

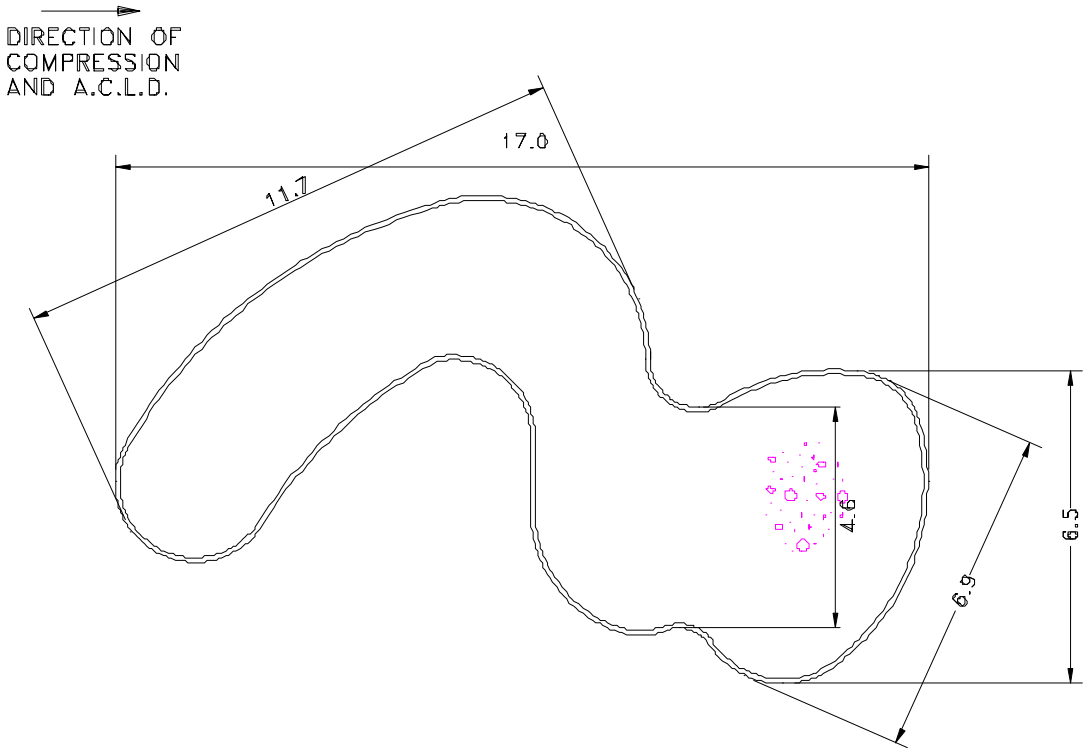


Schlegel UK, Henlow Industrial Estate, Henlow Camp, Bedfordshire, SG16 6DS
Phone: +44 1462 815500 Fax: +44 1462 811963
e:Mail: schlegeluk@schlegel.eu.com

## Application Details

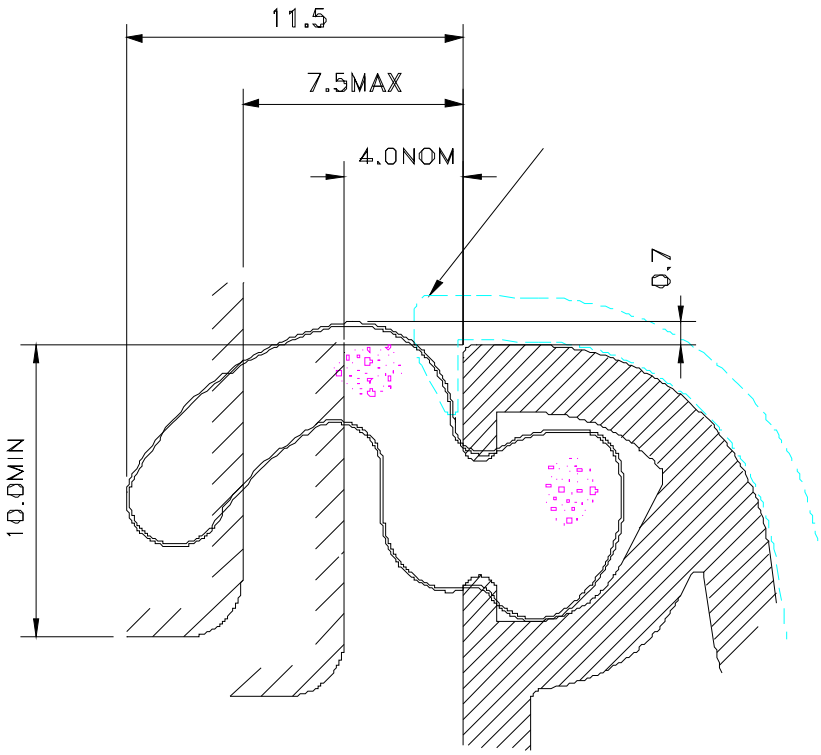


NOMINAL POCKET DETAIL
SCALE 5:1

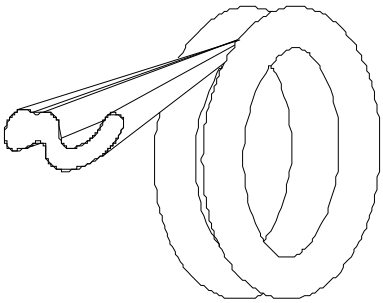

COIL DIRECTION OF
STANDARD Q-LON 9536
PT No. 02795360/1/2

Schlegel UK, Henlow Industrial Estate, Henlow Camp, Bedfordshire, SG16 6DS
Phone: +44 1462 815500 Fax: +44 1462 811963
e:Mail: schlegeluk@schlegel.eu.com

## Material / Components

**Exterior Liner** = Poly-ethylene, low friction, UV stable
Exterior Liner Melt Index = approx. 0,85 g/10 min at 190 °C,, 2,16 kg mass – 2.0MI
**Hard Foot / insert** = Poly-propylene OR Glass fibre roving (part specific) Poly-propylene back / TPE foot for exposed barb products
**Foam Core** = H/R Poly-Urethane, exhibiting excellent memory performance over wide temp range

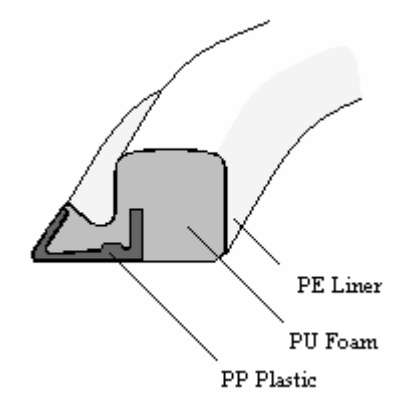


## Nominal Value of Thermal Conductivity

Low density P.E (used for the outer skin) is advised at 0.33 W/mKelvin
P.U.foam at a density of 70Kg / cubic mtr having a conductivity of 0.05 W/mKelvin
*A proposed nominal value for all our seals = 0.06W/mKelvin.*

## CO-EFFICIENT OF FRICTION OF LINER (QLON SURFACE)

| | | | | |
|---|---|---|---|---|
| COF of Quality 163.00; film against steel; DIN EN ISO 8295 | | | | |
| | | | | |
| | **95 µm** | **140 µm** | | |
| **Static** | 0.241 | 0.146 | | |
| **Kinetic** | 0.251 | 0.157 | | |

## Fire Rating

These seals are NOT fire resistant but can be used in conjunction with intumesant strips as 'smokeseals' – Smoke seal application testing is undertaken on the whole door set and as such we are unable to provide information on individual seals

## Nominal Values for Sound Reduction Weighting

$R_w(C,C_{tr})$ = 32 (-1; -3)dB
$R_w(C,C_{tr})$ = 22 (-1; -1)dB
$R_w(C,C_{tr})$ = 16 (-1; 0)dB
$R_w(C,C_{tr})$ = 29 (0; -2)dB

## Packaging Specification

UK Card packing; 2 Coils per box; Nominal ***m / Coil
Coil = 825 OD – 425 ID; Box = 710*710*380mm

Schlegel UK, Henlow Industrial Estate, Henlow Camp, Bedfordshire, SG16 6DS
Phone: +44 1462 815500 Fax: +44 1462 811963
e:Mail: schlegeluk@schlegel.eu.com

## Part Numbers

```
02795360  Q-LON 9536 WHT 250M        CL     250
02795361  Q-LON 9536 BRZ 250M        CL     250
02795362  Q-LON 9536 BLK 250M        CL     250
02795367  Q-LON 9536 SLVR GRY 250M   CL     250
```

## BBA Report

| CRITERIA | B.B.A. 345/1 1993 | B.B.A. Report 1990 | Comments |
|---|---|---|---|
| TENSILE STRENGTH AFTER AGEING | < 25% REDUCTION AFTER 10 DAYS AT $70^0$C | O% REDUCTION AFTER 28 DAYS | Q-Lon Exceeds the requirement |
| ELONGATION AT BREAK AFTER AGEING. | < 25% REDUCTION | > 5% REDUCTION AFTER 28 DAYS. | Q-Lon Exceeds the requirement |
| HARDNESS CHANGE AFTER AGEING | < 25% REDUCTION AFTER 10 DAYS AT $70^0$C | COMPRESSION FORCE CHANGED BY 5% AFTER 28 DAYS | Q-Lon Exceeds the requirement |
| TEAR RESISTANCE | RAW MATERIAL TEST ONLY | NO ASSESSMENT | |
| DEFLECTION RECOVERY 24HRS @ $23^0$C<br><br>24hrs @ -$15^0$C<br><br>14DAYS @ $55^0$C | > 75% RECOVERY<br><br>> 75% RECOVERY (LESS THAN 25% SET<br><br>>25% RECOVERY | 91.67% RECOVERY @ $70^0$C<br><br>100% RECOVERY<br><br>NOT ASSESSED | Q-Lon Exceeds the requirement |
| OZONE RESISTANCE | | NOT ASSESSED & NOT AFFECTED BY OZONE | This criteria is a limitation of Rubber / E.P.D.M. |
| DIMENSIONAL STABILITY | HEAT REVERSION < 2% | DIMENSIONAL STABILITY 0.01% | Q-Lon Exceeds the requirement |

The B.P.F. have reviewed the 345/1 document and are shortly to publish a revision. The revisions take account of current European draft standards for seals and will most likely include the following changes.

1. Test methods will not be limited to raw material assessment.

2. The test methods will allow the seal performance to be graded as opposed to minimum levels being specified. The system is intended to allow an appropriate seal to be specified for an application. Minimum performances are still assessed via the functionality tests of the complete window / door unit.

Schlegel UK, Henlow Industrial Estate, Henlow Camp, Bedfordshire, SG16 6DS
Phone: +44 1462 815500 Fax: +44 1462 811963
e:Mail: schlegeluk@schlegel.eu.com

**Performance Benefits Summary**

**Excellent memory** – Returns to original shape after compression
**Stability** – Low/no stretch gained by GF internal cord or insert
**Easily compressed** – Low compression forces, Unaffected by temp variance (tested to -30oC to +70oC)
**Acoustic performance** – Independent testing and comparison data available
**Paint and Stain Proof** – Properties un-affected by standard paints and stains
**Stabilised** – Unaffected by rot, Fungi, UV light or Ozone.
**Colour** – Wide range of available options (bronze, white, black, greys, etc)
**Jointing** – Can be joined with silicone sealant or welded in situ'
**Patented. – Selling Seals to the industry for over 30 years**

Schlegel UK, Henlow Industrial Estate, Henlow Camp, Bedfordshire, SG16 6DS
Phone: +44 1462 815500 Fax: +44 1462 811963
e:Mail: schlegeluk@schlegel.eu.com